| MAT 265 – Calculus for Engineers-I | Student Name : |
|---|---|
| Instructor : Instructor | Student ID : |
| Exam # 3 (Form A) | Class Time : |

## Honor Statement

**By signing below I confirm that I have neither given nor received any unauthorized assistance on this exam. This includes any use of a graphing calculator beyond those uses specifically authorized by the School of Mathematical and Statistical Sciences and my instructor. Furthermore, I agree not to discuss this exam with anyone until the exam testing period is over. In addition, my calculator's memory and menus may be checked at any time and cleared by any testing center proctor or School of Mathematical and Statistical Sciences instructor.**

_____ _____

**Signature** **Date**

## Instructions:

1. **The exam consists of two parts: multiple choice, worth 70%, and free response (show your work), worth 30%. Please read each problem carefully.**
2. **There are 14 multiple choice questions worth 5 points each. Please circle your answer choice on the exam AND fill in the answer grid on the last page.**
3. **Provide complete and well-organized answers in the free response section.**
4. **Answers in the free response section without supporting work will be given zero credit. Partial credit is granted only if work is shown.**
5. **No calculators with Qwerty keyboards or ones like the Casio FX-2, TI-89, TI-92, or TI-*n*spire that do symbolic algebra may be used.**
6. **Proctors reserve the right to check calculators.**
7. **Please request scratch paper from the testing center staff if you need.**
8. **The use of cell phones is prohibited. TURN YOUR CELL PHONE OFF! Do not allow your cell phone to ring while you are taking the exam. Do not use the calculator on your cell phone. If a proctor sees you using a cell phone, they will take your exam and you will be reported to the Dean of Students for cheating.**

**PART I – Multiple choice. Please <u>circle your answer</u> choice on the exam and <u>fill in the answer grid on the last page</u>. Use the space beside the answers to work your solution.**

1. Given that the function $f(x) = 5sin(4x)$ satisfies the hypotheses of Rolle's Theorem over $[0, \frac{\pi}{4}]$, find the value(s) of c that satisfy the conclusion of Rolle's Theorem.

   A. $\frac{\pi}{4}$
   B. $\frac{\pi}{8}$
   C. $\frac{\pi}{9}$
   D. $0.4$
   E. None of the above

2. Given that the function $f(x) = 5 - x^2$ over $[-1,2]$ satisfies the hypotheses of the Mean Value Theorem, find the value(s) of c that satisfy the conclusion of the Mean Value Theorem.

   A. $\frac{1}{2}$
   B. $-\frac{1}{2}$
   C. $0$
   D. $-0.49$
   E. None of the above

3. Determine whether the given statements are true or false.
   **Statement I**: If $x = c$ is a critical number of $f$, then $f$ has a local maximum or minimum at c.
   **Statement II**: If $f$ has a local maximum or minimum at c, then $x = c$ is a critical number of $f$.
   A. I and II are both true
   B. I is true, II is false
   C. I is false, II is true
   D. I and II are both false
   E. None of the above

4. Determine whether the given statements are true or false.
   **Statement I**: If $f$ is continuous on (a, b), then $f$ attains an absolute maximum at a number c in (a, b).
   **Statement II**: If $(c, f(c))$ is an inflection point of the graph of $y = f(x)$, then $f''(c) = 0$.
   A. I and II are both true
   B. I is true, II is false
   C. I is false, II is true
   D. I and II are both false
   E. None of the above

5. Determine whether the given statements are true or false.
   **Statement I**: If $f$ is continuous on [a, b], then $\int_a^b f(x)dx = \int_a^b f(t)dt$.
   **Statement II**: If $f$ is continuous on [a, b], then $\int_a^b x\ f(x)dx = x\int_a^b f(x)dx$
   A. I and II are both true
   B. I is true, II is false
   C. I is false, II is true
   D. I and II are both false

E. None of the above

6. The graph of $y = f'(x)$ (the derivative of $f$) is given below . We can see that

| | |
|---|---|
| A. $f$ has a local minimum at x = 3.<br>B. $f$ has no extremum at x = 4.<br>C. $f$ has a local maximum at x = 2.<br>D. $f(4) = 0$<br>E. None of the above | 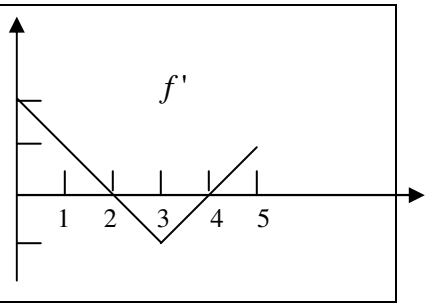 |

7. Find $f(x)$ such that $f'(x) = 4x - 3\sin(x) + 2\,e^x$ *and* $f(0) = -2$.

A. $f(x) = 2x^2 + 3\cos x + 2e^x - 7$
B. $f(x) = 2x^2 + 3\cos x + 2e^x - 5$
C. $f(x) = 2x^2 - 3\cos x + 2e^x - 1$
D. $f(x) = 2x^2 + 3\cos x + 2e^x$
E. None of the above

8. Find the general antiderivative of $f(x) = 5 - \csc^2(x) + \dfrac{1 - x\,\cos(x)}{x}$

A. $5x + \cot x + \ln|x| + \sin x + C$
B. $5x + \cot x + \ln|x| - \sin x + C$
C. $5x - \cot x + \ln|x| + \sin x + C$
D. $5x - \cot x + \ln|x| - \sin x + C$
E. None of the above

9. Estimate $\int_1^3 e^x\,dx$ using Left Riemann sums with n = 4 rectangles, round your answer to 4 digits.

A. $L_4 = 13.3858$
B. $L_4 = 13.3848$
C. $L_4 = 22.0694$
D. $L_4 = 17.3673$
E. None of the above

10. Estimate $\int_2^3 \ln(x)\,dx$ using Right Riemann sums with n = 4 rectangles, round your answer to 4 digits.

A. $R_4 = 0.9594$
B. $R_4 = 0.6653$
C. $R_4 = 0.8580$
D. $R_4 = 0.8376$
E. None of the above

11. Find the **exact value** of $\int_{-5}^{5} \sqrt{25 - x^2}\,dx$.

A. 39
B. $\frac{5\pi}{2}$
C. $25\pi$
D. $\frac{25\pi}{2}$
E. None of the above

12. Suppose $\int_3^8 f(x)\,dx = -2$ and $\int_5^8 f(x)\,dx = 5$, find $\int_5^3 2f(x)\,dx$.

A. 7
B. -7
C. 16
D. $-14$
E. None of the above

**For questions 13, and 14 the graph shows the velocity of an object moving along the x-axis for $0 \le t \le 11$.**

13. Compute $\int_0^{11} v(t)dt$

A. 3
B. 6
C. 8
D. 14
E. None of the above

14. Compute the total distance traveled by the object.

A. 3
B. 6
C. 8
D. 14
E. None of the above

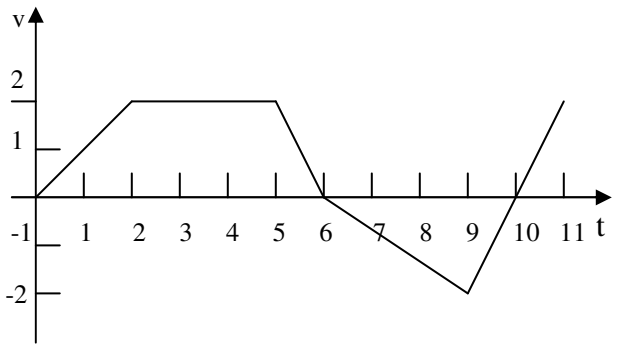

**PART II – Free response. Show all your work**

1. **Algebraically** find the largest disjoint open intervals of concavity up and down, and the inflection points of the following function. $f(x) = 5 + \pi x + 2x^2 - \frac{2}{3}x^3$. **[10 pt]**

$f'(x) = \pi + 4x - 2x^2$ (1 point)
$f''(x) = 4 - 4x$ (2 points)
possible inflection point where $f''(x) = 0 \Rightarrow 4 - 4x = 0 \Rightarrow x = 1$ (2 points)
$f''(0) = 4 > 0 \Rightarrow f$ is concave up on the interval $(-\infty, 1)$ (2 points)
$f''(2) = -4 < 0 \Rightarrow f$ is concave down on the interval $(1, \infty)$ (2 points)
so there is an inflection point $at\ x = 1, y = 19/3 + \pi$ (1 point)

2. Let $f(x) = 5x\, e^{-x}$. Use $f'(x)$ and **algebraically** find (1) all critical points, (2) the intervals on which $f(x)$ is increasing or decreasing, and (3) the local maximum and minimum values of *f*. **[10 pt]**

Critical points will be where $f'(x) = 0 \Rightarrow 5e^{-x} - 5xe^{-x} = 0 \Rightarrow 5e^{-x}(1 - x) = 0 \Rightarrow x = 1$ (4 points)
$f'(2) = \frac{-5}{e} < 0 \Rightarrow f$ is decreasing on the interval $(1, \infty)$ (2 points)
So there is a local (absolute) maximum at $x = 1, y = \frac{5}{e}$ (2 point)

3. A right circular cylinder is inscribed in a sphere of radius $\sqrt{3}$. Find the largest possible volume of such a cylinder. **[10 pt]**

$V = \pi r^2 h$ (2 points)
$h = 2x,\ r^2 = 3 - x^2$ (2 points)
$V = \pi(3 - x^2)(2x) = 6\pi x - 2\pi x^3$ (2 points)
Critical point where
$\frac{dV}{dx} = 0 \Rightarrow 6\pi - 6\pi x^2 = 0 \Rightarrow x^2 = 1 \Rightarrow x = 1$ (2 points)

So $h = 2, r = \sqrt{2}$, and $V = 4\pi$. (2 points)

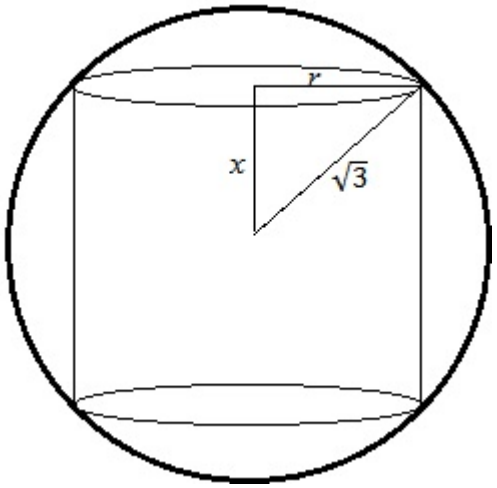

# Last Page

| Answer to multiple choice part | |
|---|---|
| Question number | Answers; A, B, C, D, or E (Please use capital) |
| 1 | B |
| 2 | A |
| 3 | C |
| 4 | D |
| 5 | B |
| 6 | C |
| 7 | A |
| 8 | B |
| 9 | A |
| 10 | C |
| 11 | D |
| 12 | E |
| 13 | B |
| 14 | D |

| Total point | |
|---|---|
| Multiple choice points | |
| Show work points | |
| Test # 3 total points | |

# Sample new material on the final exam:

1. The velocity of a particle moving along a horizontal line is given by $v(t) = t^2 + 3t - 10$ meters per second after *t* seconds. Find the **distance** traveled by the particle during the interval $1 \leq t \leq 5$.

2. Differentiate $f(x) = \int_1^{5x} (3\sin t - 7e^{4t} + 1)dt$

3. Evaluate the integral $\int \frac{x^3 - 5x - 3}{x}\, dx$

4. Evaluate the integral $\int \left(\frac{\sin(2x)}{\cos x}\right) dx$

5. Evaluate the integral $\int_0^{0.5} \frac{1}{\sqrt{1-x^2}}\, dx$

6. Evaluate the integral $\int_0^{\ln 2} (5e^x - 2)dx$

# Sample Solutions for new material on the final exam:

1. The velocity of a particle moving along a horizontal line is given by $v(t) = t^2 + 3t - 10$ meters per second after *t* seconds. Find the **distance** traveled by the particle during the interval $1 \le t \le 5$.

$v(t) = 0 \Rightarrow (t+5)(t-2) \Rightarrow t = 2$ is the only value in the given interval.

Distance traveled is $\left|\int_1^2 t^2 + 3t - 10\, dt\right| + \left|\int_2^5 t^2 + 3t - 10\, dt\right| = \left|\frac{-19}{6}\right| + \left|\frac{81}{2}\right| = \boxed{\frac{131}{3}}$.

2. Differentiate $f(x) = \int_1^{5x} (3\sin t - 7e^{4t} + 1)dt$

$$\boxed{5(3\sin(5x) - 7e^{20x} + 1)}$$

3. Evaluate the integral $\int \frac{2x^3 - x\sec^2(x) + 2}{x}\, dx$

$$\int 2x^2 - \sec^2(x) + \frac{2}{x}\, dx = \boxed{\frac{2x^3}{3} - \tan(x) + 2\ln|x| + C}$$

4. Evaluate the integral $\int \left(\frac{\sin^2(x) - \cos^2(x)}{\sin(x) - \cos(x)}\right) dx$

$$\int \frac{(\sin(x) - \cos(x))(\sin(x) + \cos(x))}{\sin(x) - \cos(x)} dx = \int \sin(x) + \cos(x) dx = \boxed{-\cos(x) + \sin(x) + C}$$

5. Evaluate the integral $\int_0^{\sqrt{3}} \frac{1}{1+x^2} dx$

$$\int_0^{\sqrt{3}} \frac{1}{1+x^2} dx = \tan^{-1}(x)|_0^{\sqrt{3}} = \tan^{-1}(\sqrt{3}) - \tan^{-1}(0) = \boxed{\frac{\pi}{3}}$$

6. Evaluate the integral $\int_0^{\ln 3} (7e^x + 5)dx$

$$\int_0^{\ln 3} (7e^x + 5)dx = 7e^x + 5x|_0^{\ln 3} = \left(7e^{\ln 3} + 5\ln 3\right) - (7e^0) = \boxed{14 + 5\ln 3}$$